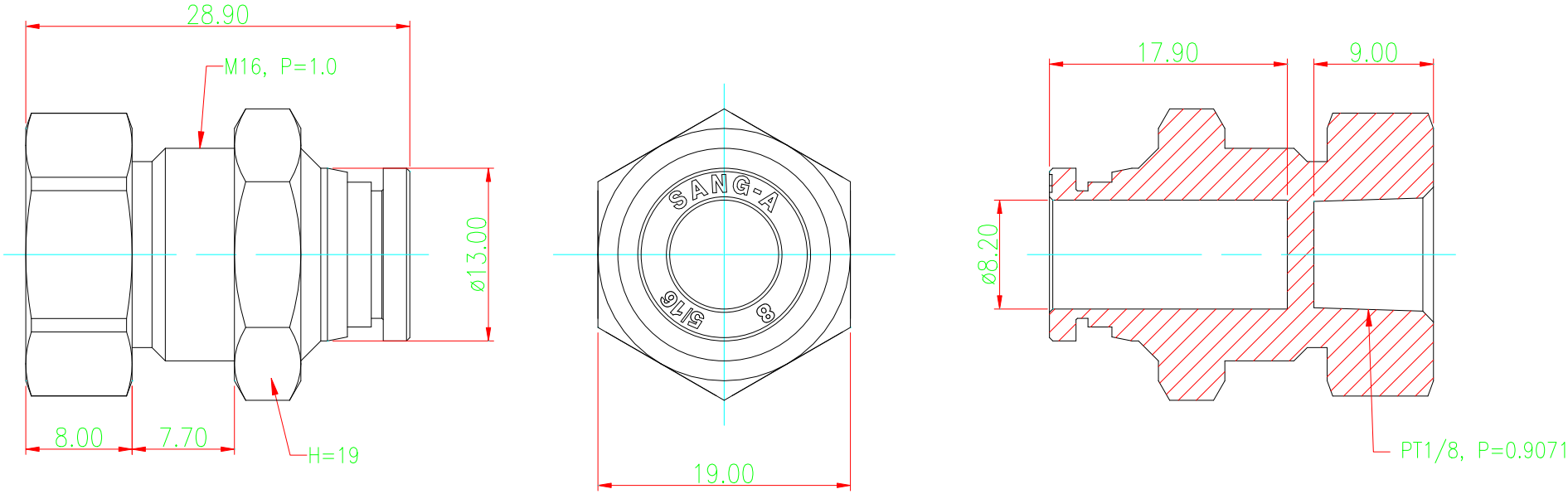
28.90
M16, P=1.0
ø13.00
8.00
7.70
H=19
SANG-A
S16
8
19.00
17.90
9.00
ø8.20
PT1/8, P=0.9071